PLOŠNI INTEGRAL

Primjer: $\iint_\Sigma x\,dy\,dz + y\,dx\,dz + z\,dx\,dy$ $\quad x^2+y^2=1$ (valjak) $\quad z=1,\ z=2$

fali $dx \to$ znači to je uz „i" i td.

* ploha nije zatvorena

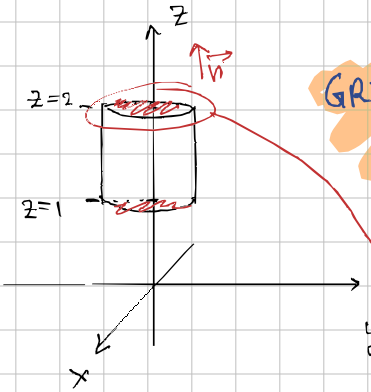

GREEN: ! po zatvorenoj plohi!

$$\iint_\Sigma \vec{f}\cdot d\vec{S} = \iiint_\Sigma \operatorname{div}\vec{f}\cdot dV$$

$\vec{f} = x\vec{i} + y\vec{j} + z\vec{k} \longrightarrow \operatorname{div}\vec{f} = 3$

↳ moramo zatvoriti valjak da možemo koristiti TM o divergenciji ⇒ kao kod krivulje

⇒ znači samo ćemo oduzeti k pomoćna

$\iiint 3\,dx\,dy\,dz$ ti bio volumen tok valjka

$\rightarrow \iiint \operatorname{div}\vec{f}\cdot dV = 3\iiint dx\,dy\,dz = 3\pi$

najbolje ići direktno ← naći normalu i naći dS; funkciju skalarno pomnožiti s tom normalom

! Kad imamo plošni integral bez funkcije u njemu ⇒ površina plohe $\longrightarrow \iint_\Omega 2\,dx\,dy = \boxed{2\pi}$ (površina kruga (zadana ploha))

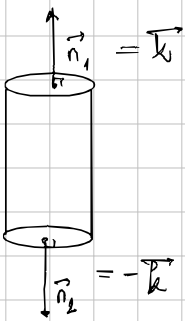

$\iint_\Omega 2\,dx\,dy = \boxed{2\pi}$

$\iint_\Omega -\,dx\,dy = \boxed{-\pi}$

$$\boxed{I_{total} = 3\pi - 2\pi - (-\pi) = 2\pi}$$

Primjer 2.) $\iint\limits_{\Sigma} z\,dS \qquad x^2+y^2+(z-3)^2=4 \qquad z\le 2$

$(z-3)^2 = 4-x^2-y^2$

$z = 3 \pm \sqrt{4-x^2-y^2}$

jer $z\le 2$! PAZI

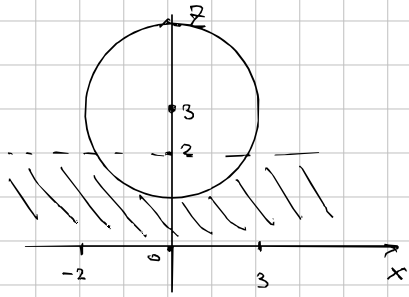

$ds = \sqrt{1+(z'_x)^2+(z'_y)^2}$

(z'_z)

$z'_x = \dfrac{\cancel{-}1}{\cancel{2}\sqrt{4-x^2-y^2}}(\cancel{-}\cancel{2}x) = \dfrac{x}{\sqrt{4-x^2-y^2}}$

$z'_y = \dfrac{y}{\sqrt{4-x^2-y^2}}$

$ds = \sqrt{1+\dfrac{x^2}{4-x^2-y^2}+\dfrac{y^2}{4-x^2-y^2}}$

$ds = \sqrt{\dfrac{4-\cancel{x^2}-\cancel{y^2}+\cancel{x^2}+\cancel{y^2}}{4-x^2-y^2}}$

$ds = \dfrac{2}{\sqrt{4-x^2-y^2}}$

$I = \iint \left(3-\sqrt{4-x^2-y^2}\right)\cdot\dfrac{2}{\sqrt{4-x^2-y^2}}\,dx\,dy$

↳ gledamo projekciju na x-y ravninu
⟹ dobijemo pun

$= \iint\left(\dfrac{6}{\sqrt{4-x^2-y^2}}-2\right)dx\,dy$

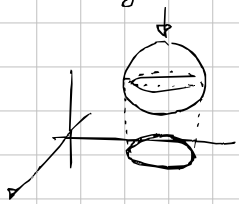

kao prsten

→ uvrstimo $z=2$ jer nam je to granica

↳ $(2-3)^2 = 4-x^2-y^2 \Longrightarrow x^2+y^2=3$

$x=\sqrt{3}\cos t \qquad \varphi\in[0,2\pi]$

$y=\sqrt{3}\sin t \qquad r\in[0,\sqrt{3}]$

$dx\,dy = r\,dr\,d\varphi$

sve to u integral

$I = \iint \dfrac{6r}{\underbrace{\sqrt{4-3\cos^2 t-3\sin^2 t}}_{-3}} - 2r\,dr\,d\varphi = \iint(6r-2r)\,dr\,d\varphi = \iint 4r\,dr\,d\varphi$

$I = \int_0^{2\pi}\dfrac{1}{\cancel{2}}r^2\cdot\cancel{4}\Big|_0^3 = \int_0^{2\pi}18\,d\varphi = \boxed{36\pi}$

Primjer 2.) Vekt polje: $\vec{f} = x^3\vec{i} + y^3\vec{j} + z^3\vec{k}$ $\quad 0 \le z \le 1$

I. Rastav na 2 integrala pa gledati xy, xz, yz

II. Direktno => normala, skalarno množenje

① $F(x,y,z)=0$

② $\nabla F = ?$ normala mora biti jedinična pa moramo $\frac{\nabla F}{\|\nabla F\|}$

$x^2+y^2-z^2=0$ $\quad \nabla F = 2x\vec{i} + 2y\vec{j} - 2z\vec{k}$ $\quad$! paziti smjer vektora !

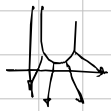

vekt normale je ↑ kada gledamo poz. polovicu!

$$\frac{\nabla f}{\|\nabla f\|} = \frac{(2x, 2y, -2z)}{\sqrt{4x^2+4y^2+4z^2}} = \frac{(x, y, -z)}{\sqrt{x^2+y^2+z^2}} = \vec{n}$$

③ $dS = ?$ $\quad z = \sqrt{x^2+y^2}$; $z'_x = \frac{x}{\sqrt{x^2+y^2}}$, $z'_y = \frac{y}{\sqrt{x^2+y^2}}$

$$dS^2 = 1 + (z'_x)^2 + (z'_y)^2 = 1+1 = 2 \longrightarrow dS = \sqrt{2}\,dx\,dy$$

④ Prema formuli: plošni integral je $\iint_\Sigma \vec{f} \times \vec{n} \cdot dS$

$$\vec{f}\cdot\vec{n} = \frac{(x^3, y^3, z^3)}{1} \cdot \frac{(x, y, -z)}{\sqrt{x^2+y^2+z^2}} = \frac{(x^4, y^4, -z^4)}{\sqrt{x^2+y^2+z^2}}$$

$$I = \iint \frac{x^4+y^4-z^4}{\sqrt{x^2+y^2+z^2}} \cdot \sqrt{2}\cdot dx\,dy$$ → ne smijem imati z ⇒ zamjena sa $z = \sqrt{x^2+y^2}$

$$z^4 = (x^2+y^2)^2 = x^4+2x^2y^2+y^4$$

$$z^2 = x^2+y^2$$

$$I = \iint \frac{-2x^2y^2}{\cancel{\sqrt{2}}\cdot\sqrt{x^2+y^2}} \cancel{\sqrt{2}}\,dx\,dy$$

⑤ Polarne koordinate: $x = \cos t$, $y = \sin t$

$$\iint \frac{-2\cos^2(t)\cdot\sin^2(t)}{1}\cdot r\cdot dr\cdot d\varphi = \boxed{-2\int_0^{2\pi}\int_0^1 \cos^2(\varphi)\sin^2(\varphi)\, r\, dr\, d\varphi}$$

Wild način

- Parametrizacija plohe
- Naći normalu
- Izračunati integral

Zad. 3.) $\vec{f} = x\vec{i} + y\vec{j} + z\vec{k}$

$y = x^2 \qquad 1 \le z \le 4 \qquad y \le 4$

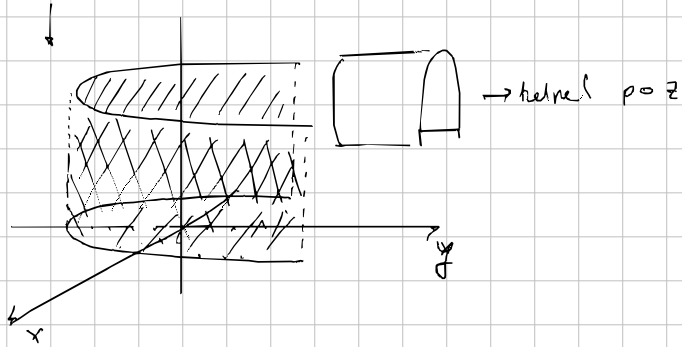

1)

$x = t$

$y = t^2$

$z = z$

$\vec{s} = t\vec{i} + t^2\vec{j} + z\vec{k}$

ako uzmemo vekt umnožak $\frac{\partial \vec{s}}{\partial t} \times \frac{\partial \vec{s}}{\partial z} = \vec{n}$

2)

$\frac{\partial \vec{s}}{\partial t} = i + 2tj$

$\frac{\partial \vec{s}}{\partial z} = \vec{k}$

$$\begin{vmatrix} i & j & k \\ 1 & 2t & 0 \\ 0 & 0 & 1 \end{vmatrix} = \vec{n} = i(2t) - j = (2t, -1)$$

$\boxed{\vec{n} = d\vec{s}\ !}$

$y \le 4 \Rightarrow x^2 \le 4 \ ; \quad x \in [-2, 2]$

3) $\vec{f} \cdot d\vec{s} \Rightarrow (t\vec{i} + t^2\vec{j} + z\vec{k})(2t\vec{i} - j) = 2t^2 - t^2 = t^2$

$$\iint_{\Sigma} \vec{f} \cdot d\vec{s} = \int_1^4 dz \int_{-2}^{2} t^2\, dt = \int_1^4 dz \cdot \frac{1}{3} \cdot t^3 \Big|_{-2}^{2} = \frac{16}{3}\int_1^4 dz = \frac{16}{\cancel{3}} \cdot \cancel{3} = \boxed{16}$$

Zadatak 5.) $\vec{f} = x\vec{i} + z\vec{k}$

$x^2 + 4y^2 = 1 \qquad z \leq y$

elipsa → ova elipsa je šupljа ⇒ samo po ovoj

(1.) Parametrizacija:

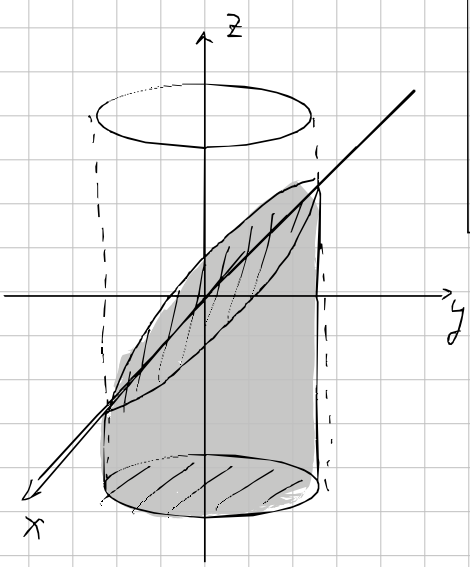

$$\boxed{\begin{aligned} x &= \cos\varphi \\ y &= \tfrac{1}{2}\sin\varphi \\ z &= z \end{aligned}} \longrightarrow z \leq \tfrac{1}{2}\sin\varphi$$

...

Zad 6.) $\oint_{\Gamma} 2dx + 2dy - xdz \qquad x^2 + y^2 = 9, \; y + z = 5$

STOKESOV TM: Krivuljne integrale po zatvorenim krivuljama možemo računati kao plošne integrale bilo koje plohe koji te krivulje zatvara

↳ npr. ovdje $y + z = 5$ nam je zadano i po toj plohi radimo

$$\vec{f} = 2\vec{i} + 2\vec{j} - x\vec{k} \longrightarrow \operatorname{rot}\vec{f} = \begin{vmatrix} i & j & k \\ \partial x & \partial y & \partial z \\ 2 & 2 & -x \end{vmatrix} = 2\hat{j}$$

normala; skalarno sa poljem

$$\frac{\nabla F}{\|\nabla F\|} = \frac{\hat{j} + \hat{k}}{\sqrt{2}} = \vec{m}$$

→ zadana ploha $y + z = 5$!

uzet ćemo funkciju po z kako bismo dobili KLUG!

$$z = 5 - y \longrightarrow dS\sqrt{1 + 0 + 1} = \sqrt{2}\,dxdy$$

$$\iint \vec{m} \cdot \vec{n} \cdot dS = \iint \frac{(\hat{j} + \hat{k})}{\cancel{\sqrt{2}}} \cdot (2\hat{j}) \cdot \cancel{\sqrt{2}}\, dxdy = \iint_{D_{x,y}} 2\,dxdy = 2\underbrace{\iint_{D_{xy}} dxdy}_{\text{površina te plohe}}$$

$$2 \cdot 3^2 \cdot \pi = \boxed{18\pi}$$